VICTORIA B
STANDARD

Art 122 016

TENE

tene_gardenhouses

Tene Kaubandus aiamajad

www.tene.ee

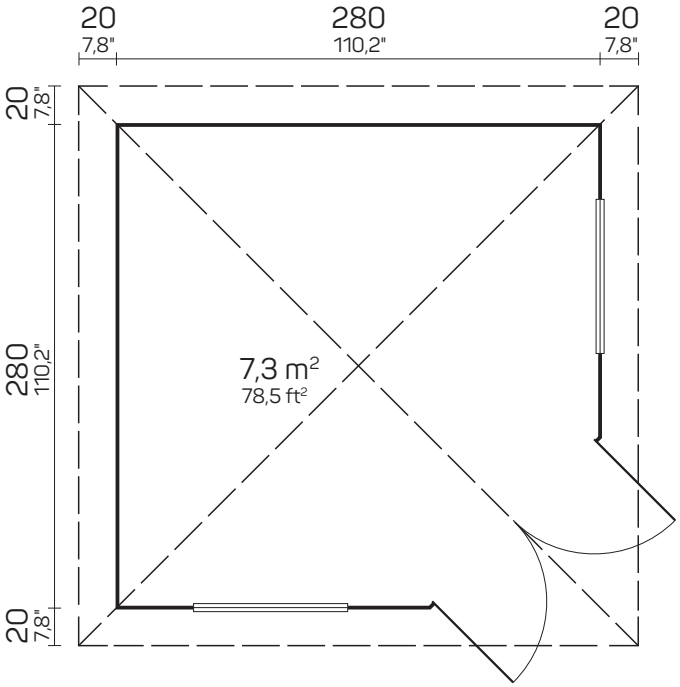

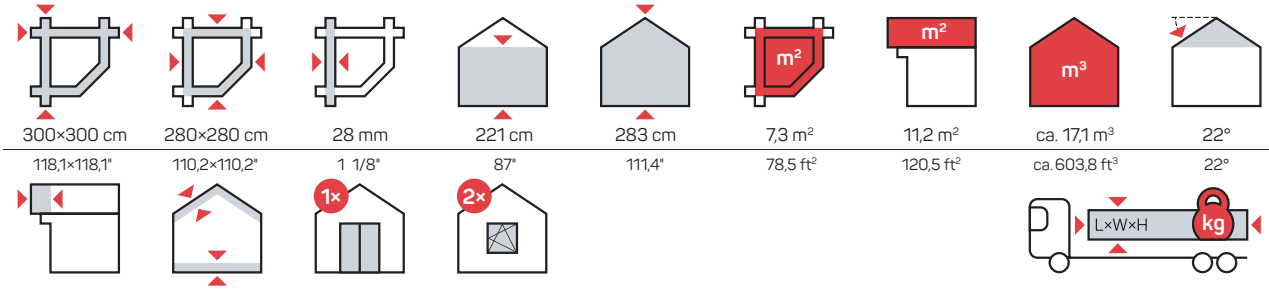

300×300 cm	280×280 cm	28 mm	221 cm	283 cm	7,3 m²	11,2 m²	ca. 17,1 m³	22°
118,1×118,1"	110,2×110,2"	1 1/8"	87"	111,4"	78,5 ft²	120,5 ft²	ca. 603,8 ft³	22°
20 cm	18+18 mm	1425×1900 mm	865×1210 mm				325×108×61/69 cm	ca. 725/798 kg
7,8"	0,7"+0,7"	56,1×74,8"	34×47,6"				127,9"×42,5"×24/27,1"	ca. 1598/1759 lb

Tene Kaubandus OÜ / Lihula mnt 22B, 90510 Haapsalu, Estonia / +372 47 22000 / info@tene.ee